REAR SECTION-BODY ASSEMBLY

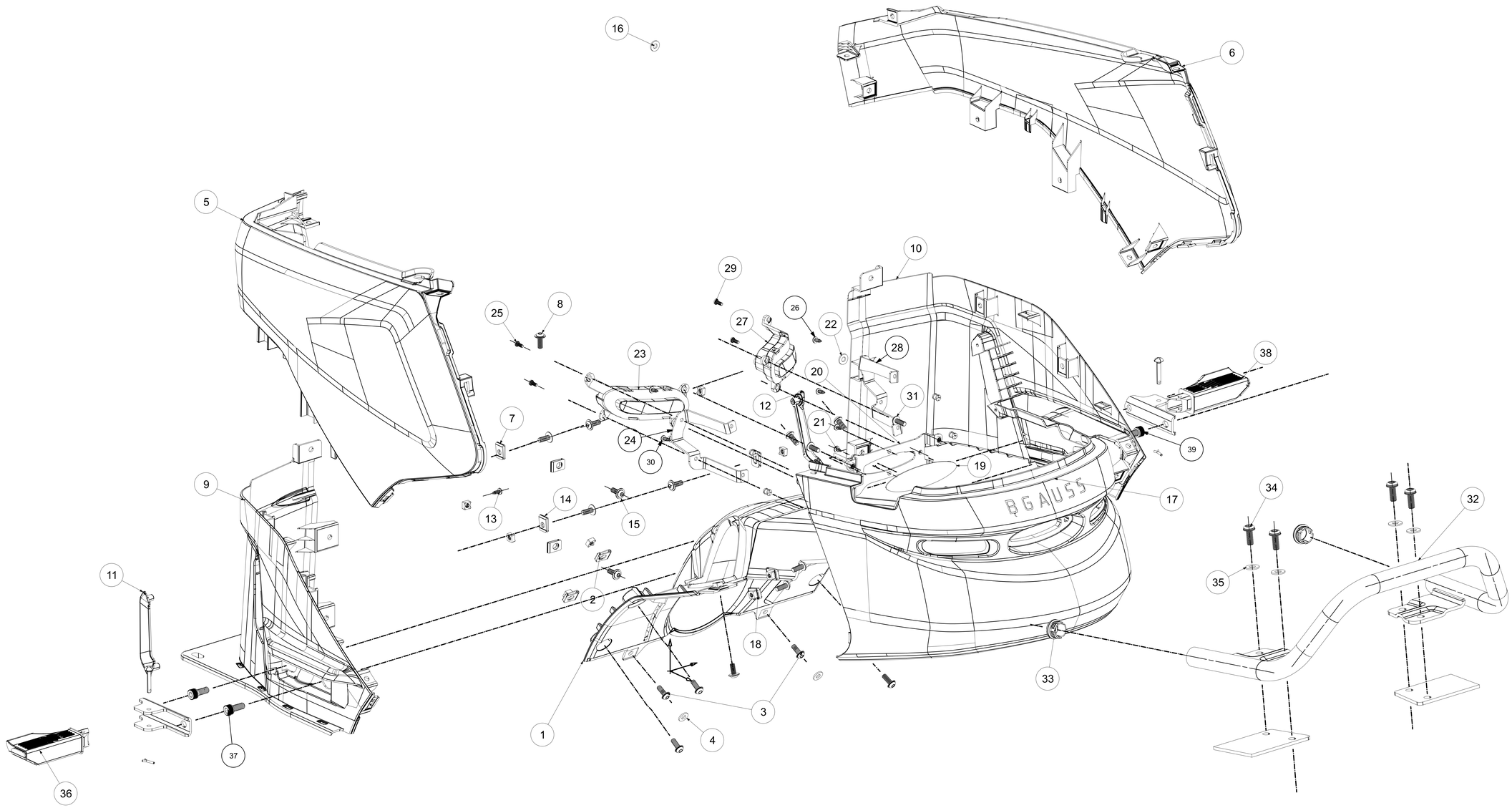

A0